Welcome to Mod-U-Lok

Temporary structure system

Now, more than ever before, the world is changing. Rules are being rewritten, values are being realigned and businesses of all shapes and sizes are reinventing themselves accordingly. Traditional paradigms have shifted irreversibly and resources such as space, time, people, capital and opportunity suddenly present a spectrum of new and unfamiliar challenges.

Mod-U-Lok has been engineered in direct response to these obstacles. It reimagines tried and tested technologies in order to make it possible for businesses to access reconfigurable, extendable and flexible structures that are both straightforward to specify and simple to install.
An ever-growing range of curved and rectilinear frames, Mod-U-Lok components can be connected together without the need for complex tools or specialist training. The result? The creation of an infinite array of spaces and structures that work for you.

Mod-U-Lok represents Unibox's commitment to affordability, quality, ingenuity and sustainability. It achieves this simply by making it possible for our clients and partners to make future-oriented investments that uphold their values, protect their reputations and, ultimately, make the world in which they operate better for everyone.

Designed and manufactured in the UK using fully-recyclable aluminium profiles – themselves formed from 50% recycled materials – Mod-U-Lok is ready to stand alongside your business and enable it to thrive in the face of adversity…time and time (and time) again.

Frame connections

Mod-U-Lok frames are connected together using components developed in-house by our team of design experts. Formed using precision engineering and built out of ultra-durable yet recyclable materials, our tool-free connectors link frames together in series and parallel with one another via CNC-machined holes measuring 62mm from centre to centre. Although the design process was complex and considered, Mod-U-Lok connectors are straightforward to use without the need for any specialist training.

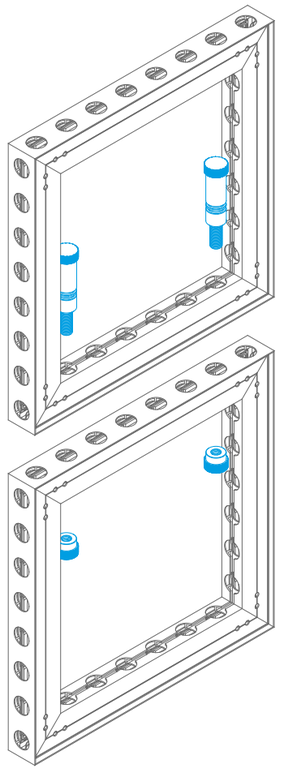

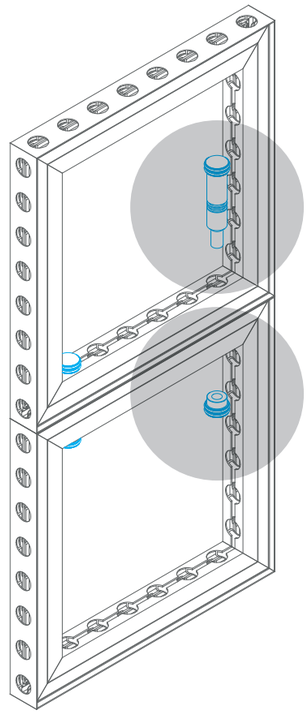

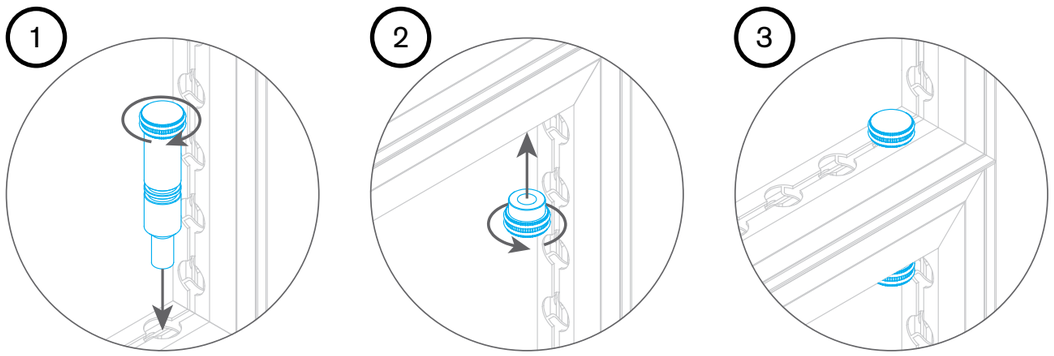

Calculating a structure

Calculating the frame size that will be most appropriate for the dimensions of your space can be done quickly and easily, simply by following the instructions detailed below.

The number of holes that will be required is calculated using these equations:

Height of space (Y axis) ÷ 62mm
Width of space (Z axis) ÷ 62mm
Depth of space (X axis) ÷ 62mm

Each answer should be rounded DOWN to the nearest whole number. The number of holes will correspond to a particular frame size, measured in millimetres (mm).

Example:

For a space measuring 3000mm (Y) by 5000mm (Z) by 4000mm (X), the following number of holes will be required:

3000 ÷ 62mm = 48.3 (rounded to 48)
5000 ÷ 62mm = 80.6 (rounded to 80)
4000 ÷ 62mm = 64.5 (rounded to 64)

Y: 48 holes
Z: 80 holes
X: 64 holes

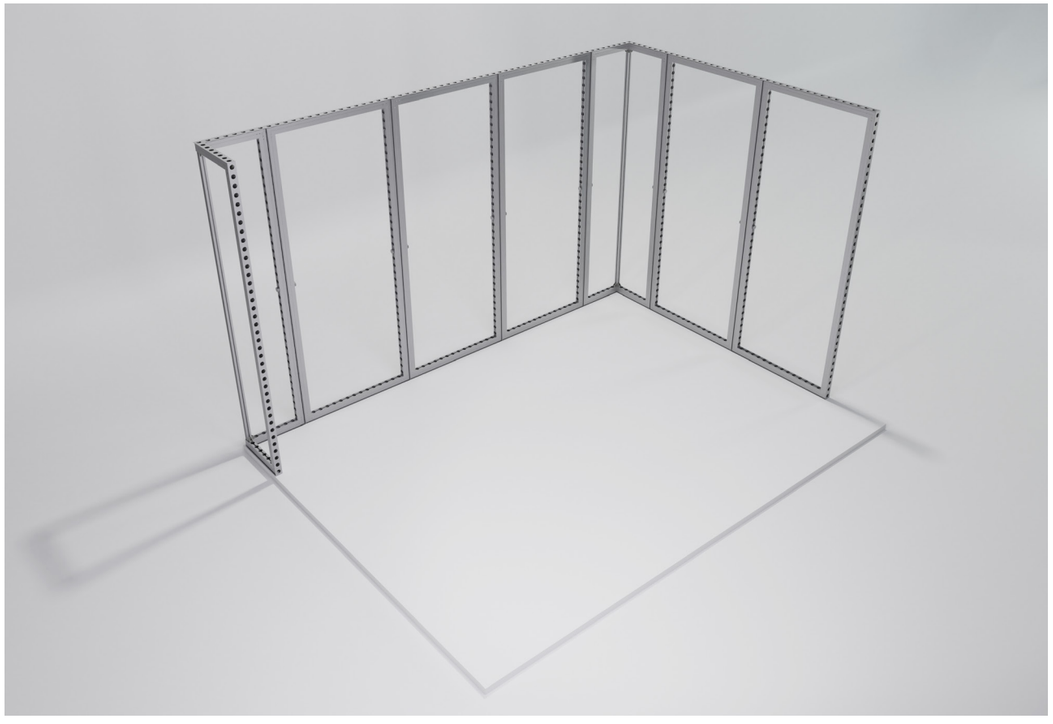

Frame assembly

To extend the flexibility of Mod-U-Lok even further, each aluminium profile, connector and accessory has been engineered so that structures can be disassembled and reassembled using nothing more than an Allen key. This unique feature enables you to transport frames easily from one event to another and store them for use in the future making Mod-U-Lok the cost-effective, environmentally-friendly solution, practical solution for applications of all types.

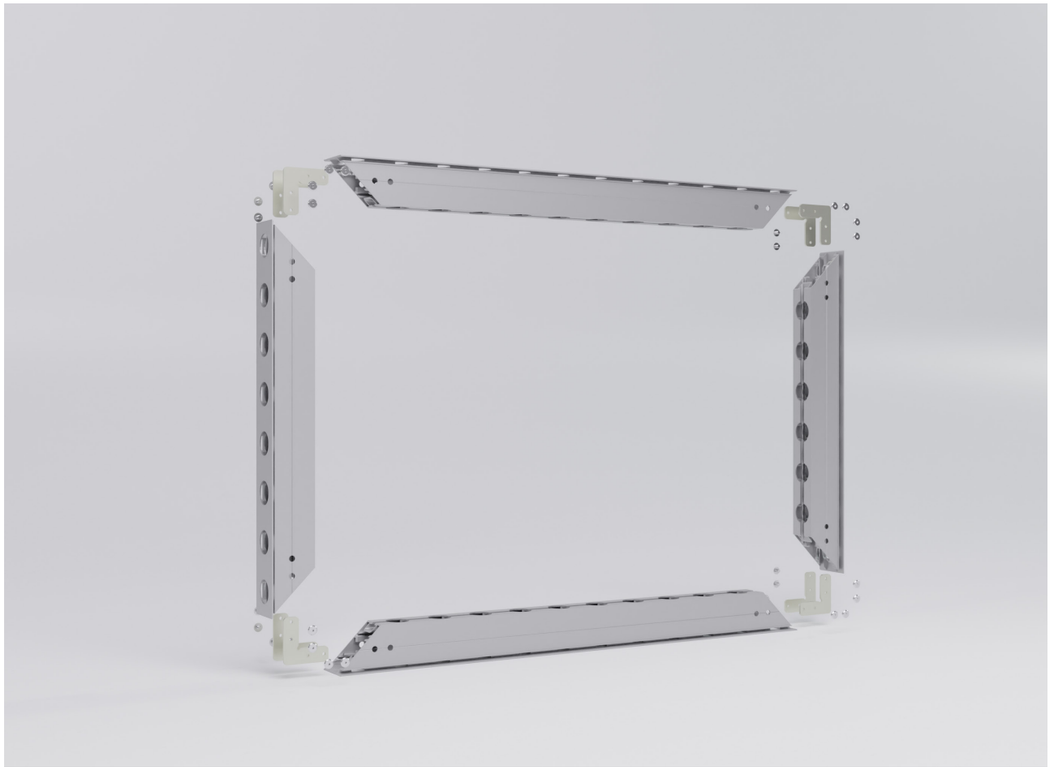

Straight frames Technical info

Frame Sizes

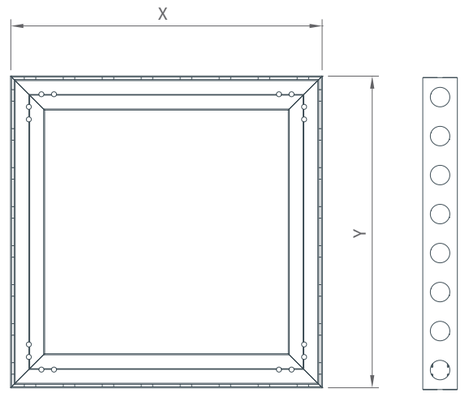

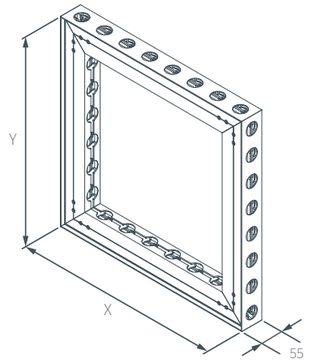

Panel Sizes - (Dimensions are in millimetres unless stated otherwise).

Panel A: Edge to edge coverage

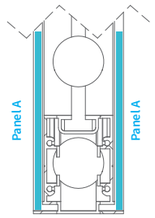

Panel B: Exposes the slots

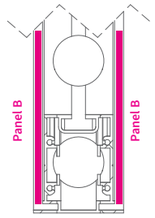

For panels using **custom size** frames use the following formulae:

- **Panel A =** Frame (**X**-4 mm) x (**Y**-4 mm)
- **Panel B =** Frame (**X**-14 mm) x (**Y**-4 mm)
- **Tension Fabric size =** Frame (**X**) x (**Y**)

Drawing for illustrative purposes only. Frames can be clad in any combination of panel finish.

Profile & Hole Detail

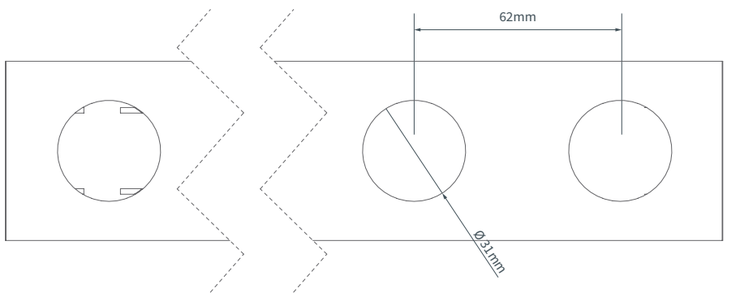

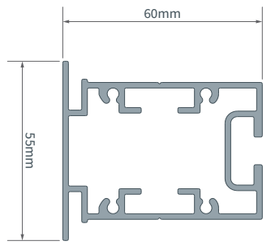

Straight frames Sizes & part codes

Frame Width X		Frame Height Y		Panel A		Panel B		Fabric Size		Product Code
mm	Holes	mm	Holes	X	Y	X	Y	X	Y	
310	5	496	8	306	492	306	482	310	496	ML1S 0310 0496
310	5	744	12	306	740	306	730	310	744	ML1S 0310 0744
310	5	992	16	306	988	306	978	310	992	ML1S 0310 0992
310	5	1240	20	306	1236	306	1226	310	1240	ML1S 0310 1240
310	5	1488	24	306	1484	306	1474	310	1488	ML1S 0310 1488
310	5	1984	32	306	1980	306	1970	310	1984	ML1S 0310 1984
310	5	2418	39	306	2414	306	2404	310	2418	ML1S 0310 2418
310	5	2480	40	306	2476	306	2466	310	2480	ML1S 0310 2480
496	8	496	8	492	492	492	482	496	496	ML1S 0496 0496
496	8	744	12	492	740	492	730	496	744	ML1S 0496 0744
496	8	992	16	492	988	492	978	496	992	ML1S 0496 0992
496	8	1240	20	492	1236	492	1226	496	1240	ML1S 0496 1240
496	8	1488	24	492	1484	492	1474	496	1488	ML1S 0496 1488
496	8	1984	32	492	1980	492	1970	496	1984	ML1S 0496 1984
496	8	2418	39	492	2414	492	2404	496	2418	ML1S 0496 2418
496	8	2480	40	492	2476	492	2466	496	2480	ML1S 0496 2480
496	8	2976	48	492	2972	492	2962	496	2976	ML1S 0496 2976
744	12	744	12	740	740	740	730	744	744	ML1S 0744 0744
744	12	992	16	740	988	740	978	744	992	ML1S 0744 0992
744	12	1240	20	740	1236	740	1226	744	1240	ML1S 0744 1240
744	12	1488	24	740	1484	740	1474	744	1488	ML1S 0744 1488
744	12	1984	32	740	1980	740	1970	744	1984	ML1S 0744 1984
744	12	2418	39	740	2414	740	2404	744	2418	ML1S 0744 2418
744	12	2480	40	740	2476	740	2466	744	2480	ML1S 0744 2480
744	12	2976	48	740	2972	740	2962	744	2976	ML1S 0744 2976
992	16	992	16	988	988	988	978	992	992	ML1S 0992 0992
992	16	1240	20	988	1236	988	1226	992	1240	ML1S 0992 1240
992	16	1488	24	988	1484	988	1474	992	1488	ML1S 0992 1488
992	16	1984	32	988	1980	988	1970	992	1984	ML1S 0992 1984
992	16	2418	39	988	2414	988	2404	992	2418	ML1S 0992 2418
992	16	2480	40	988	2476	988	2466	992	2480	ML1S 0992 2480
992	16	2976	48	988	2972	988	2962	992	2976	ML1S 0992 2976
1240	20	1240	20	1236	1236	1236	1226	1240	1240	ML1S 1240 1240
1240	20	1488	24	1236	1484	1236	1474	1240	1488	ML1S 1240 1488
1240	20	1984	32	1236	1980	1236	1970	1240	1984	ML1S 1240 1984
1240	20	2418	39	1236	2414	1236	2404	1240	2418	ML1S 1240 2418
1240	20	2480	40	1236	2476	1236	2466	1240	2480	ML1S 1240 2480
1240	20	2976	48	1236	2972	1236	2962	1240	2976	ML1S 1240 2976
1488	24	1488	24	1484	1484	1484	1474	1488	1488	ML1S 1488 1488

Seamless corner Technical info

Frame Sizes

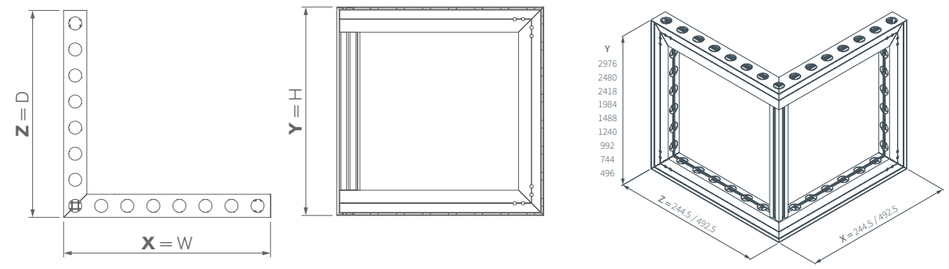

Panel Sizes - (Dimensions are in millimetres unless stated otherwise).

Panel A: Edge to edge coverage

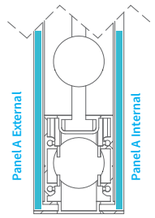

For panels using **custom size** frames use the following formulae:

- **Panel A (Outer) =** Frame (**X**+**Z**-4 mm) x (**Y**-4 mm)
- **Panel A (Inner) =** Frame (**X**+**Z**-114 mm) x (**Y**-4 mm)
- **Outer Tension Fabric size =** Frame (**X**+**Z**) x (**Y**)
- **Inner Tension Fabric size =** Frame (**X**+**Z** -114 mm) x (**Y**)

Drawing for illustrative purposes only. Frames can be clad in any combination of panel finish.

Seamless corner Sizes & part codes

Frame Width Z		Frame Width X		Frame Height Y		Panel A				Fabric Size				Product Code
						External		Internal		External		Internal		
mm	Holes	mm	Holes	mm	Holes	X+Z	Y	X+Z	Y	X+Z	Y	X+Z	Y	
244.5	4	244.5	4	496	8	485	492	375	492	489	496	379	496	ML1C 0244 0496
244.5	4	244.5	4	744	12	485	740	375	740	489	744	379	744	ML1C 0244 0744
244.5	4	244.5	4	992	16	485	988	375	988	489	992	379	992	ML1C 0244 0992
244.5	4	244.5	4	1240	20	485	1236	375	1236	489	1240	379	1240	ML1C 0244 1240
244.5	4	244.5	4	1488	24	485	1484	375	1484	489	1488	379	1488	ML1C 0244 1488
244.5	4	244.5	4	1984	32	485	1980	375	1980	489	1984	379	1984	ML1C 0244 1984
244.5	4	244.5	4	2418	39	485	2414	375	2414	489	2418	379	2418	ML1C 0244 2418
244.5	4	244.5	4	2480	40	485	2476	375	2476	489	2480	379	2480	ML1C 0244 2480
244.5	4	244.5	4	2976	48	485	2972	375	2972	489	2976	379	2976	ML1C 0244 2976
492.5	8	492.5	8	496	8	981	492	871	492	985	496	875	496	ML1C 0492 0496
492.5	8	492.5	8	744	12	981	740	871	740	985	744	875	744	ML1C 0492 0744
492.5	8	492.5	8	992	16	981	988	871	988	985	992	875	992	ML1C 0492 0992
492.5	8	492.5	8	1240	20	981	1236	871	1236	985	1240	875	1240	ML1C 0492 1240
492.5	8	492.5	8	1488	24	981	1484	871	1484	985	1488	875	1488	ML1C 0492 1488
492.5	8	492.5	8	1984	32	981	1980	871	1980	985	1984	875	1984	ML1C 0492 1984
492.5	8	492.5	8	2418	39	981	2414	871	2414	985	2418	875	2418	ML1C 0492 2418
492.5	8	492.5	8	2480	40	981	2476	871	2476	985	2480	875	2480	ML1C 0492 2480
492.5	8	492.5	8	2976	48	981	2972	871	2972	985	2976	875	2976	ML1C 0492 2976

Adjustable frame Technical info

Frame Sizes

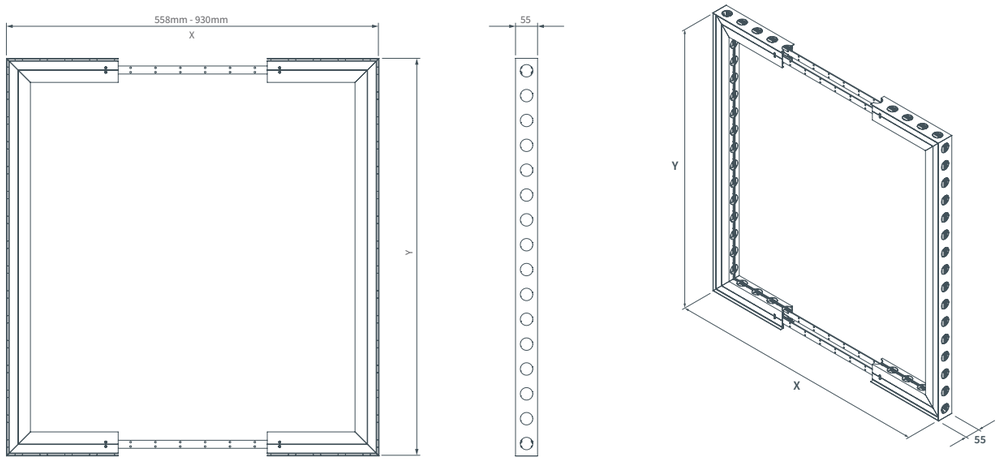

Panel Sizes - (Dimensions are in millimetres unless stated otherwise).

Panel A: Edge to edge coverage

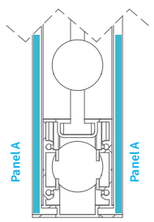

Panel B: Exposes the slots

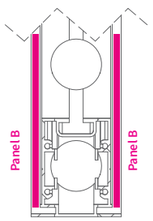

For panels using **custom size** frames use the following formulae:
- **Panel A =** Frame (**X**+**Z**-4 mm) x (**Y**-4 mm)
- **Panel B =** Frame (**X**+**Z**-14 mm) x (**Y**-4 mm)
- **Tension Fabric size =** Frame (**X**+**Z**) x (**Y**)

Drawing for illustrative purposes only. Frames can be clad in any combination of panel finish.

Adjustable frame Sizes & part codes

Frame Width X		Frame Height Y		Panel A		Panel B		Fabric Size		Product Code
mm	Holes	mm	Holes	X	Y	X	Y	X	Y	
558 - 930	9 - 15	496	8	(Specified Width - 4mm)	492	(Specified Width - 14mm)	492	(Specified Width)	496	ML1AF 0496
558 - 930	9 - 15	744	12	(Specified Width - 4mm)	740	(Specified Width - 14mm)	740	(Specified Width)	744	ML1AF 0744
558 - 930	9 - 15	992	16	(Specified Width - 4mm)	988	(Specified Width - 14mm)	988	(Specified Width)	992	ML1AF 0992
558 - 930	9 - 15	1240	20	(Specified Width - 4mm)	1236	(Specified Width - 14mm)	1236	(Specified Width)	1240	ML1AF 1240
558 - 930	9 - 15	1488	24	(Specified Width - 4mm)	1484	(Specified Width - 14mm)	1484	(Specified Width)	1488	ML1AF 1488
558 - 930	9 - 15	1984	32	(Specified Width - 4mm)	1980	(Specified Width - 14mm)	1980	(Specified Width)	1984	ML1AF 1984
558 - 930	9 - 15	2418	39	(Specified Width - 4mm)	2414	(Specified Width - 14mm)	2414	(Specified Width)	2418	ML1AF 2418
558 - 930	9 - 15	2480	40	(Specified Width - 4mm)	2476	(Specified Width - 14mm)	2476	(Specified Width)	2480	ML1AF 2480
558 - 930	9 - 15	2976	48	(Specified Width - 4mm)	2972	(Specified Width - 14mm)	2972	(Specified Width)	2976	ML1AF 2976

Seamless U Technical info

Frame Sizes

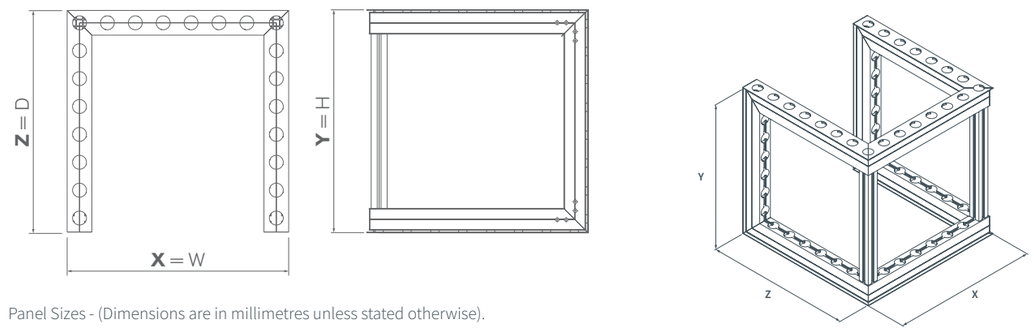

Panel Sizes - (Dimensions are in millimetres unless stated otherwise).

Panel A: Edge to edge coverage

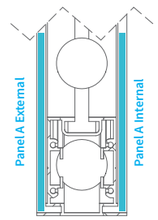

For panels using **custom size** frames use the following formulae:
- **Panel A (Outer) =** Frame (**Z+X**+**Z**-4 mm) x (**Y**-4 mm)
- **Panel A (Inner) =** Frame (**Z+X**+**Z**-114 mm) x (**Y**-4 mm)
- **Outer Tension Fabric size =** Frame (**X**+**Z**) x (**Y**)
- **Inner Tension Fabric size =** Frame (**X**+**Z** -114 mm) x (**Y**)

Drawing for illustrative purposes only. Frames can be clad in any combination of panel finish.

Seamless U Sizes & part codes

Frame Width Z		Frame Width X		Frame Height Y		Panel A				Fabric Size				Product Code
						External		Internal		External		Internal		
mm	Holes	mm	Holes	mm	Holes	Z+X+Z	Y	Z+X+Z	Y	Z+X+Z	Y	Z+X+Z	Y	
244.5	4	489	8	496	8	974	492	864	492	978	496	868	496	ML1U 0244 0496
244.5	4	489	8	744	12	974	740	864	740	978	744	868	744	ML1U 0244 0744
244.5	4	489	8	992	16	974	988	864	988	978	992	868	992	ML1U 0244 0992
244.5	4	489	8	1240	20	974	1236	864	1236	978	1240	868	1240	ML1U 0244 1240
244.5	4	489	8	1488	24	974	1484	864	1484	978	1488	868	1488	ML1U 0244 1488
244.5	4	489	8	1984	32	974	1980	864	1980	978	1984	868	1984	ML1U 0244 1984
244.5	4	489	8	2418	39	974	2414	864	2414	978	2418	868	2418	ML1U 0244 2418
244.5	4	489	8	2480	40	974	2476	864	2476	978	2480	868	2480	ML1U 0244 2480
244.5	4	489	8	2976	48	974	2972	864	2972	978	2976	868	2976	ML1U 0244 2976
492.5	8	489	8	496	8	1470	492	1360	492	1474	496	1364	496	ML1U 0492 0496
492.5	8	489	8	744	12	1470	740	1360	740	1474	744	1364	744	ML1U 0492 0744
492.5	8	489	8	992	16	1470	988	1360	988	1474	992	1364	992	ML1U 0492 0992
492.5	8	489	8	1240	20	1470	1236	1360	1236	1474	1240	1364	1240	ML1U 0492 1240
492.5	8	489	8	1488	24	1470	1484	1360	1484	1474	1488	1364	1488	ML1U 0492 1488
492.5	8	489	8	1984	32	1470	1980	1360	1980	1474	1984	1364	1984	ML1U 0492 1984
492.5	8	489	8	2418	39	1470	2414	1360	2414	1474	2418	1364	2418	ML1U 0492 2418
492.5	8	489	8	2480	40	1470	2476	1360	2476	1474	2480	1364	2480	ML1U 0492 2480
492.5	8	489	8	2976	48	1470	2972	1360	2972	1474	2976	1364	2976	ML1U 0492 2976

Doors Technical info

Frame Sizes

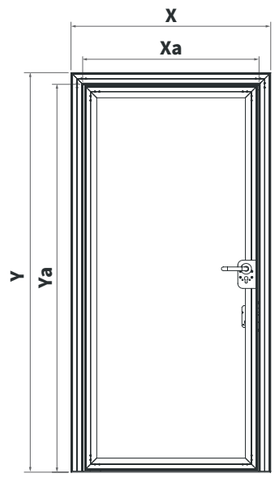

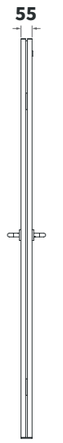

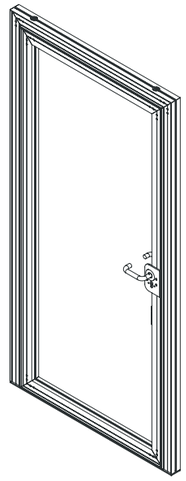

Panel Sizes - (Dimensions are in millimetres unless stated otherwise).

Panel A: Edge to edge coverage

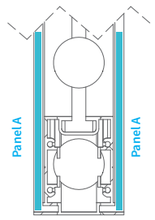

For panels using **custom size** frames use the following formulae:

- **Panel A =** Frame (**Xa**-4 mm) x (**Ya**-4 mm)
- **Tension Fabric size =** Frame (**Xa**) x (**Ya**)

Drawing for illustrative purposes only. Frames can be clad in any combination of panel finish.

Door Handle Cut Out

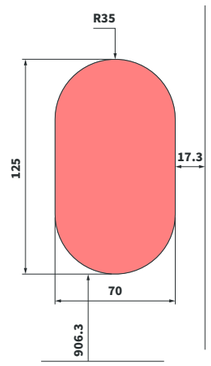

Please note: Any door handle detail for Panel A or Tension Fabrics requires clearance detail to allow the door handle to be fitted.

The clearance hole should be 906.3mm from the bottom of the panel or tension fabric.

Doors Sizes & part codes

Door Frame Width X		Door Frame Height Y		Door Width Xa	Door Height Ya	Panel A		Fabric Size		Product Code
mm	Holes	mm	Holes	mm	mm	X	Y	X	Y	
992	16	1984	32	858	1909	854	1905	858	1909	ML1D 0992 1984
1240	20	1984	32	1106	1909	1102	1905	1106	1909	ML1D 1240 1984
992	16	2418	39	858	2343	854	2339	858	2343	ML1D 0992 2418
1240	20	2418	39	1106	2343	1102	2339	1106	2343	ML1D 1240 2418

Glazed panel Technical info

Frame Sizes

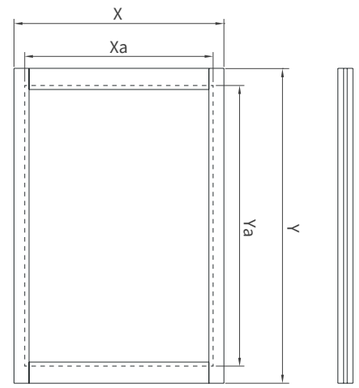

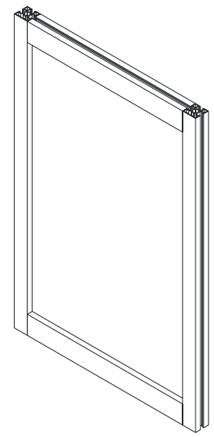

Panel Sizes - (Dimensions are in millimetres unless stated otherwise).

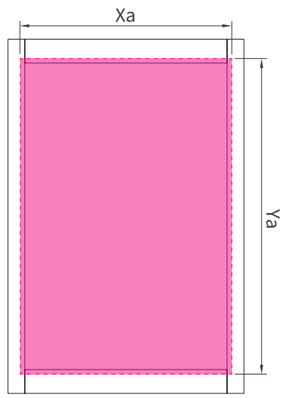

For creating your own glazed panels use the following formulae:

- **Glazed Panel =** Frame (**X**-52 mm = **Xa**) x (**Y**-81 mm = **Ya**)

Drawing for illustrative purposes only. Frames can be clad in any combination of panel finish.

Top Elevation:

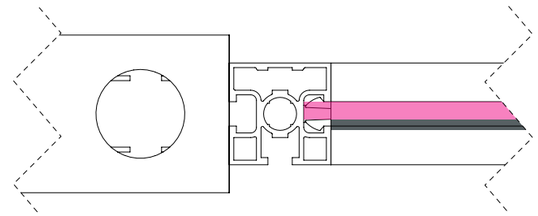

Fixing Method

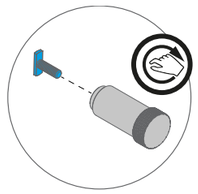

Step 1

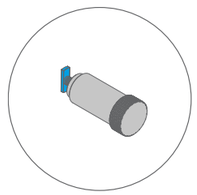

Step 2

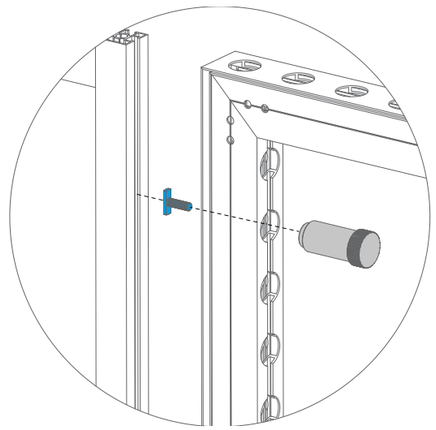

Step 3

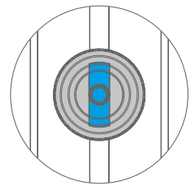

Step 4

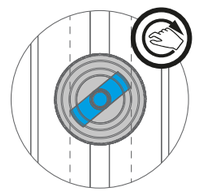

Step 5

Glazed panels Sizes & part codes

Frame Width X		Frame Height Y		Glazed Panel		Product Code
mm	Holes	mm	Holes	X	Y	
310	5	496	8	258	415	ML1GP 0310 0496
310	5	744	12	258	663	ML1GP 0310 0744
310	5	992	16	258	911	ML1GP 0310 0992
310	5	1240	20	258	1159	ML1GP 0310 1240
310	5	1488	24	258	1407	ML1GP 0310 1488
310	5	1984	32	258	1903	ML1GP 0310 1984
310	5	2418	39	258	2337	ML1GP 0310 2418
310	5	2480	40	258	2399	ML1GP 0310 2480
496	8	496	8	444	415	ML1GP 0496 0496
496	8	744	12	444	663	ML1GP 0496 0744
496	8	992	16	444	911	ML1GP 0496 0992
496	8	1240	20	444	1159	ML1GP 0496 1240
496	8	1488	24	444	1407	ML1GP 0496 1488
496	8	1984	32	444	1903	ML1GP 0496 1984
496	8	2418	39	444	2337	ML1GP 0496 2418
496	8	2480	40	444	2399	ML1GP 0496 2480
496	8	2976	48	444	2895	ML1GP 0496 2976
744	12	744	12	692	663	ML1GP 0744 0744
744	12	992	16	692	911	ML1GP 0744 0992
744	12	1240	20	692	1159	ML1GP 0744 1240
744	12	1488	24	692	1407	ML1GP 0744 1488
744	12	1984	32	692	1903	ML1GP 0744 1984
744	12	2418	39	692	2337	ML1GP 0744 2418
744	12	2480	40	692	2399	ML1GP 0744 2480
744	12	2976	48	692	2895	ML1GP 0744 2976
992	16	992	16	940	911	ML1GP 0992 0992
992	16	1240	20	940	1159	ML1GP 0992 1240
992	16	1488	24	940	1407	ML1GP 0992 1488
992	16	1984	32	940	1903	ML1GP 0992 1984
992	16	2418	39	940	2337	ML1GP 0992 2418
992	16	2480	40	940	2399	ML1GP 0992 2480
992	16	2976	48	940	2895	ML1GP 0992 2976

Joining glazed panels

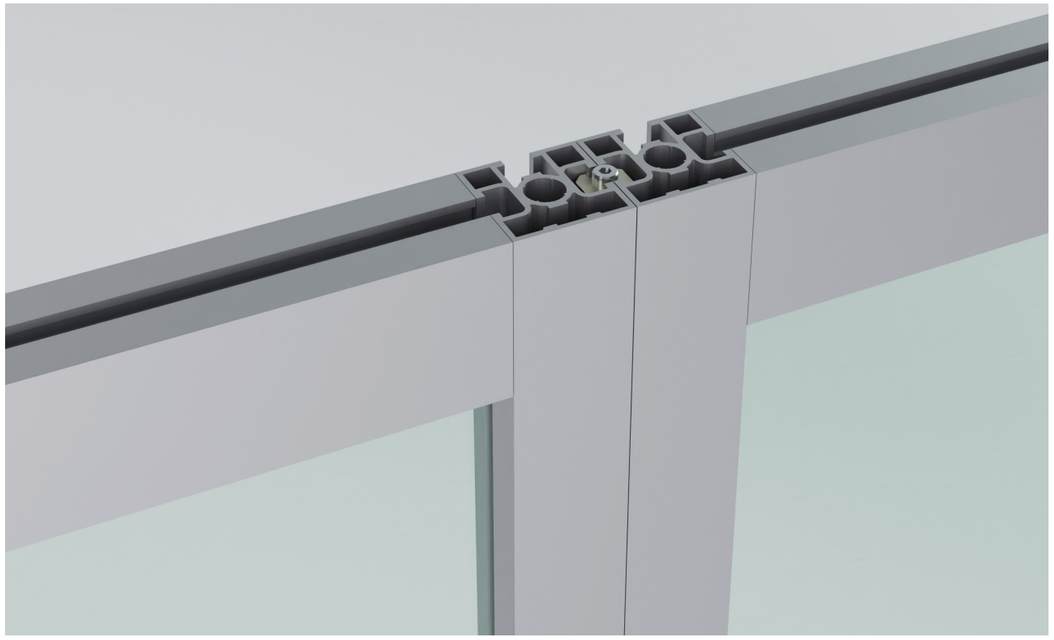

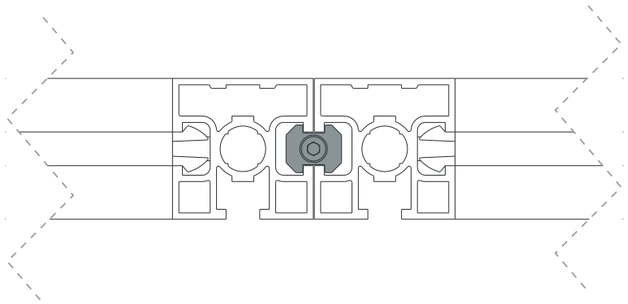

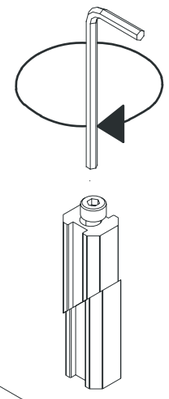

Joining panels is easy using our wedge connectors. These connectors are inserted into the top and bottom of the channel apertures and only need a few turns of an Allen key to be fixed securely in place.

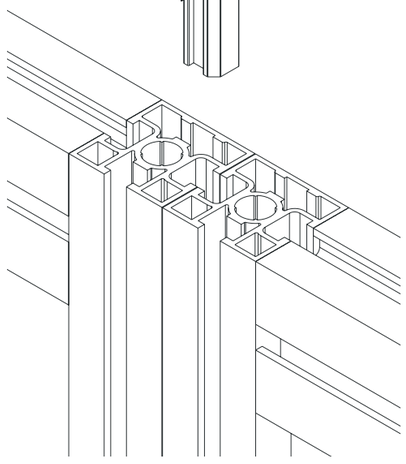

Capped corner 90° Technical info

Frame Sizes

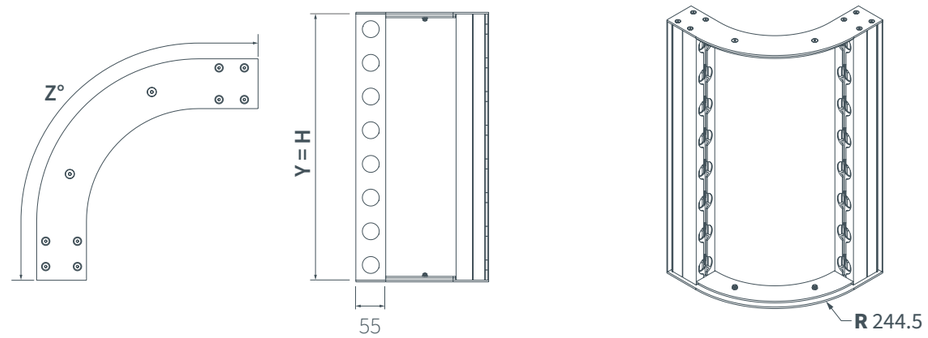

Panel Sizes - (Dimensions are in millimetres unless stated otherwise).

Panel A: Edge to edge coverage

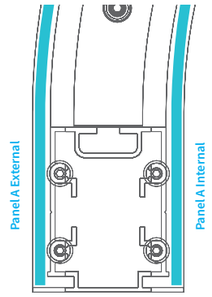

For panels using **custom size** frames use the following formulae:

- **Panel A (Outer) =** (**X** - 8.7 mm) = **Xa** x (**Y**-4 mm)
- **Panel A (Inner) =** (**Z** - 7.4 mm) = **Za** x (**Y**-4 mm)

Drawing for illustrative purposes only.

Capped corner 90° Sizes & part codes

External Arc Length X	Internal Arc Length Z	Frame Height Y		Panel A				Product Code
				External		Internal		
mm	mm	mm	Holes	Xa	Y	Za	Y	
412.2	325.8	496	8	403.5	492	318.4	492	ML1G 0492 0496
412.2	325.8	744	12	403.5	740	318.4	740	ML1G 0492 0744
412.2	325.8	992	16	403.5	988	318.4	988	ML1G 0492 0992
412.2	325.8	1240	20	403.5	1236	318.4	1236	ML1G 0492 1240
412.2	325.8	1488	24	403.5	1484	318.4	1484	ML1G 0492 1488
412.2	325.8	1984	32	403.5	1980	318.4	1980	ML1G 0492 1984
412.2	325.8	2418	39	403.5	2414	318.4	2414	ML1G 0492 2418
412.2	325.8	2480	40	403.5	2476	318.4	2476	ML1G 0492 2480
412.2	325.8	2976	48	403.5	2972	318.4	2972	ML1G 0492 2976

Capped corner 180° Technical info

Frame Sizes

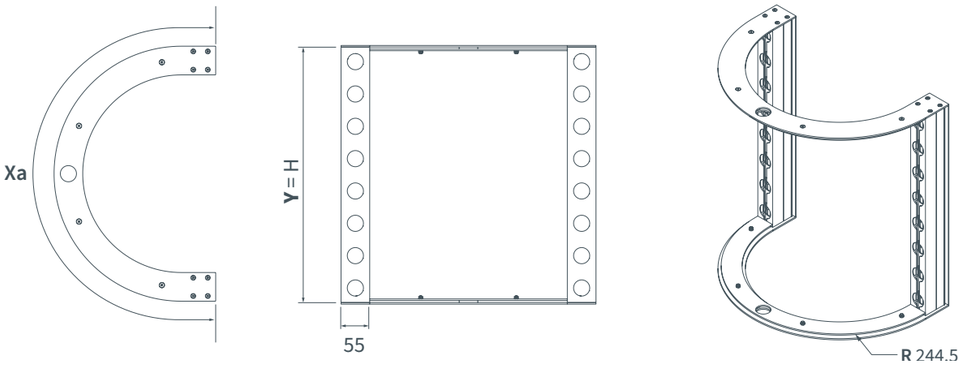

Panel Sizes - (Dimensions are in millimetres unless stated otherwise).

Panel A: Edge to edge coverage

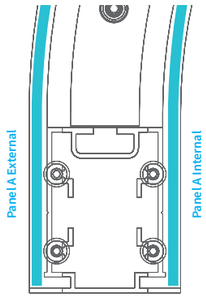

For panels using **custom size** frames use the following formulae:
- **Panel A (Outer) =** (**X** - 16.8 mm) = **Xa** x (**Y**-4 mm)
- **Panel A (Inner) =** (**Z** - 7.4 mm) = **Za** x (**Y**-4 mm)

Drawing for illustrative purposes only.

Curved frame R492.5 Technical info

Frame Sizes

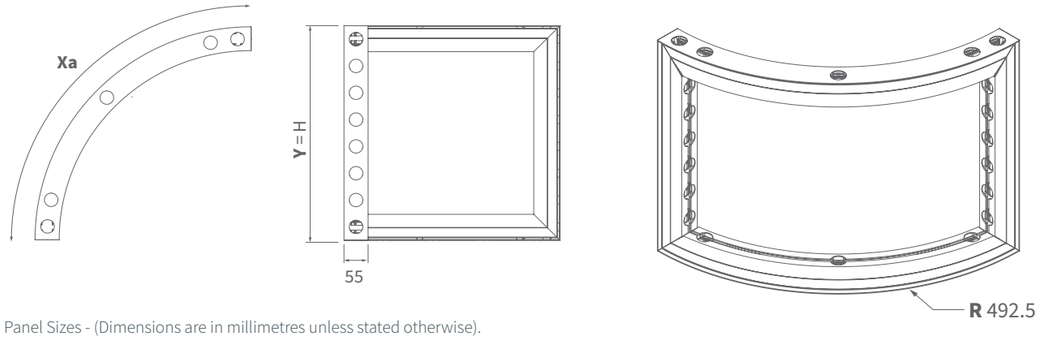

Panel Sizes - (Dimensions are in millimetres unless stated otherwise).

Panel A: Edge to edge coverage

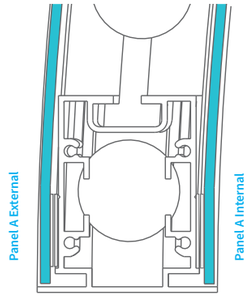

For panels using **custom size** frames use the following formulae:
- **Panel A (Outer) =** (**X** - 8.1 mm) = **Xa** x (**Y**-4 mm)
- **Panel A (Inner) =** (**Z** + 0.7 mm) = **Za** x (**Y**-4 mm)
- **Outer Tension Fabric size =** (**X** = **Xb**) x (**Y**)
- **Inner Tension Fabric size =** (**Z** = **Zb**) x (**Y**)

Drawing for illustrative purposes only.

Capped corner 180° Sizes & part codes

External Arc Length X	Internal Arc Length Z	Frame Height Y		Panel A				Product Code
				External		Internal		
mm	mm	mm	Holes	Xa	Y	Za	Y	
899.1	726.3	496	8	882.3	492	718.9	492	ML1E 0244 0496
899.1	726.3	744	12	882.3	740	718.9	740	ML1E 0244 0744
899.1	726.3	992	16	882.3	988	718.9	988	ML1E 0244 0992
899.1	726.3	1240	20	882.3	1236	718.9	1236	ML1E 0244 1240
899.1	726.3	1488	24	882.3	1484	718.9	1484	ML1E 0244 1488
899.1	726.3	1984	32	882.3	1980	718.9	1980	ML1E 0244 1984
899.1	726.3	2418	39	882.3	2414	718.9	2414	ML1E 0244 2418
899.1	726.3	2480	40	882.3	2476	718.9	2476	ML1E 0244 2480
899.1	726.3	2976	48	882.3	2972	718.9	2972	ML1E 0244 2976

Curved frame R492.5 Sizes & part codes

External Arc Length X	Internal Arc Length Z	Frame Height Y		Panel A				Fabric Size				Product Code
				External		Internal		External		Internal		
mm	mm	mm	Holes	Xa	Y	Za	Y	Xb	Y	Zb	Y	
773.6	687.2	496	8	764.9	492	687.9	492	773.6	496	687.2	496	ML1J 0492 0496
773.6	687.2	744	12	764.9	740	687.9	740	773.6	744	687.2	744	ML1J 0492 0744
773.6	687.2	992	16	764.9	988	687.9	988	773.6	992	687.2	992	ML1J 0492 0992
773.6	687.2	1240	20	764.9	1236	687.9	1236	773.6	1240	687.2	1240	ML1J 0492 1240
773.6	687.2	1488	24	764.9	1484	687.9	1484	773.6	1488	687.2	1488	ML1J 0492 1488
773.6	687.2	1984	32	764.9	1980	687.9	1980	773.6	1984	687.2	1984	ML1J 0492 1984
773.6	687.2	2418	39	764.9	2414	687.9	2414	773.6	2418	687.2	2418	ML1J 0492 2418
773.6	687.2	2480	40	764.9	2476	687.9	2476	773.6	2480	687.2	2480	ML1J 0492 2480
773.6	687.2	2976	48	764.9	2972	687.9	2972	773.6	2976	687.2	2976	ML1J 0492 2976

Curved frame R988.5 Technical info

Frame Sizes

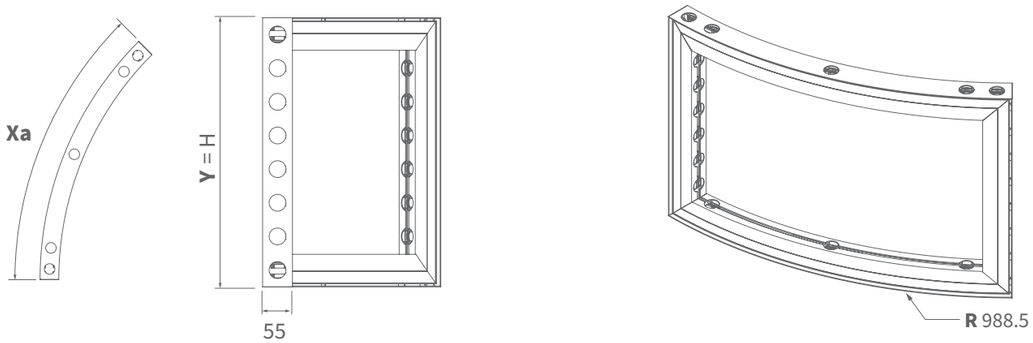

Panel Sizes - (Dimensions are in millimetres unless stated otherwise).

Panel A: Edge to edge coverage

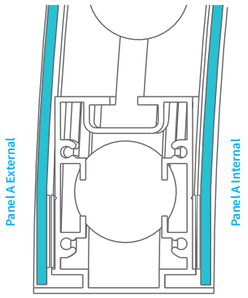

For panels using **custom size** frames use the following formulae:

- **Panel A (Outer) =** (**X** - 6.4 mm) = **Xa** x (**Y**-4 mm)
- **Panel A (Inner) =** (**Z** - 1.7 mm) = **Za** x (**Y**-4 mm)
- **Outer Tension Fabric size =** (**X** = **Xb**) x (**Y**)
- **Inner Tension Fabric size =** (**Z** = **Zb**) x (**Y**)

Drawing for illustrative purposes only.

Curved frame R1484.5 Technical info

Frame Sizes

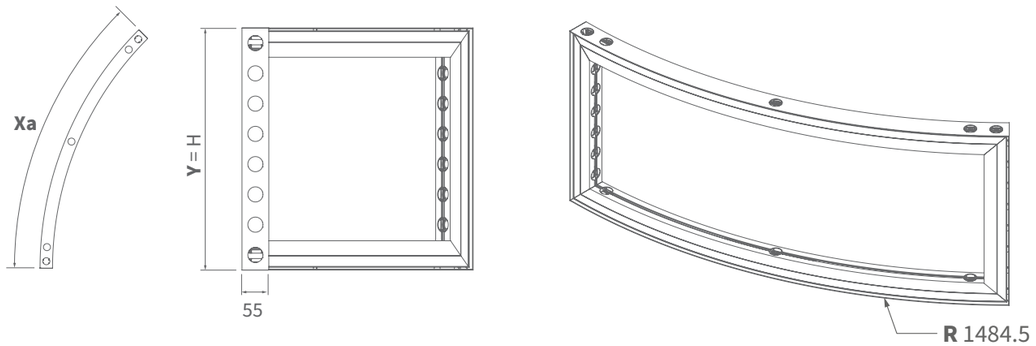

Panel Sizes - (Dimensions are in millimetres unless stated otherwise).

Panel A: Edge to edge coverage

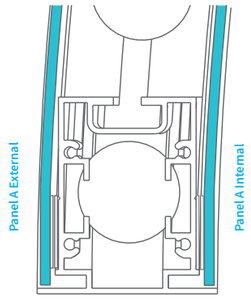

For panels using **custom size** frames use the following formulae:

- **Panel A (Outer) =** (**X** - 6.3 mm) = **Xa** x (**Y**-4 mm)
- **Panel A (Inner) =** (**Z** - 1.6 mm) = **Za** x (**Y**-4 mm)
- **Outer Tension Fabric size =** (**X** = **Xb**) x (**Y**)
- **Inner Tension Fabric size =** (**Z** = **Zb**) x (**Y**)

Drawing for illustrative purposes only.

Curved frame R988.5 Sizes & part codes

External Arc Length X	Internal Arc Length Z	Frame Height Y		Panel A				Fabric Size				Product Code
				External		Internal		External		Internal		
mm	mm	mm	Holes	Xa	Y	Za	Y	Xb	Y	Zb	Y	
776.4	733.2	496	8	770	492	731.5	492	776.4	496	733.2	496	ML1L 0988 0496
776.4	733.2	744	12	770	740	731.5	740	776.4	744	733.2	744	ML1L 0988 0744
776.4	733.2	992	16	770	988	731.5	988	776.4	992	733.2	992	ML1L 0988 0992
776.4	733.2	1240	20	770	1236	731.5	1236	776.4	1240	733.2	1240	ML1L 0988 1240
776.4	733.2	1488	24	770	1484	731.5	1484	776.4	1488	733.2	1488	ML1L 0988 1488
776.4	733.2	1984	32	770	1980	731.5	1980	776.4	1984	733.2	1984	ML1L 0988 1984
776.4	733.2	2418	39	770	2414	731.5	2414	776.4	2418	733.2	2418	ML1L 0988 2418
776.4	733.2	2480	40	770	2476	731.5	2476	776.4	2480	733.2	2480	ML1L 0988 2480
776.4	733.2	2976	48	770	2972	731.5	2972	776.4	2976	733.2	2976	ML1L 0988 2976

Curved frame R1484.5 Sizes & part codes

External Arc Length X	Internal Arc Length Z	Frame Height Y		Panel A				Fabric Size				Product Code
				External		Internal		External		Internal		
mm	mm	mm	Holes	Xa	Y	Za	Y	Xb	Y	Zb	Y	
1165.9	1122.7	496	8	1159.6	492	1121.1	492	1165.9	496	1122.7	496	ML1N 1484 0496
1165.9	1122.7	744	12	1159.6	740	1121.1	740	1165.9	744	1122.7	744	ML1N 1484 0744
1165.9	1122.7	992	16	1159.6	988	1121.1	988	1165.9	992	1122.7	992	ML1N 1484 0992
1165.9	1122.7	1240	20	1159.6	1236	1121.1	1236	1165.9	1240	1122.7	1240	ML1N 1484 1240
1165.9	1122.7	1488	24	1159.6	1484	1121.1	1484	1165.9	1488	1122.7	1488	ML1N 1484 1488
1165.9	1122.7	1984	32	1159.6	1980	1121.1	1980	1165.9	1984	1122.7	1984	ML1N 1484 1984
1165.9	1122.7	2418	39	1159.6	2414	1121.1	2414	1165.9	2418	1122.7	2418	ML1N 1484 2418
1165.9	1122.7	2480	40	1159.6	2476	1121.1	2476	1165.9	2480	1122.7	2480	ML1N 1484 2480
1165.9	1122.7	2976	48	1159.6	2972	1121.1	2972	1165.9	2976	1122.7	2976	ML1N 1484 2976

Curved frame R2972.5 Technical info

Frame Sizes

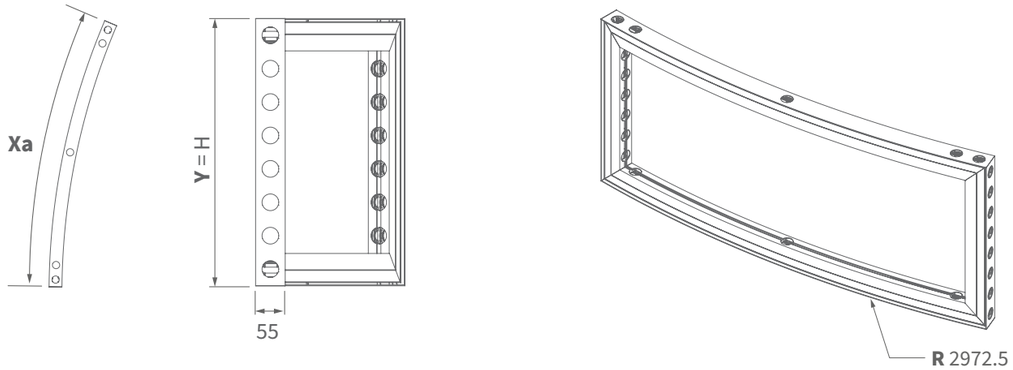

Panel Sizes - (Dimensions are in millimetres unless stated otherwise).

Panel A: Edge to edge coverage

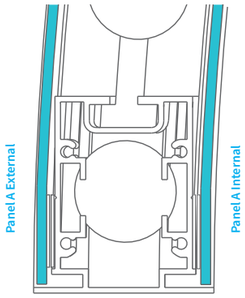

For panels using **custom size** frames use the following formulae:

- **Panel A (Outer) =** (**X** - 5.4 mm) = **Xa** x (**Y**-4 mm)
- **Panel A (Inner) =** (**Z** - 2.8 mm) = **Za** x (**Y**-4 mm)
- **Outer Tension Fabric size =** (**X** = **Xb**) x (**Y**)
- **Inner Tension Fabric size =** (**Z** = **Zb**) x (**Y**)

Drawing for illustrative purposes only.

Curved frame R2972.5 Sizes & part codes

External Arc Length X	Internal Arc Length Z	Frame Height Y		Panel A				Fabric Size				Product Code
				External		Internal		External		Internal		
mm	mm	mm	Holes	Xa	Y	Za	Y	Xb	Y	Zb	Y	
1167.3	1145.7	496	8	1161.9	492	1142.9	492	1167.3	496	1145.7	496	ML1R 2972 0496
1167.3	1145.7	744	12	1161.9	740	1142.9	740	1167.3	744	1145.7	744	ML1R 2972 0744
1167.3	1145.7	992	16	1161.9	988	1142.9	988	1167.3	992	1145.7	992	ML1R 2972 0992
1167.3	1145.7	1240	20	1161.9	1236	1142.9	1236	1167.3	1240	1145.7	1240	ML1R 2972 1240
1167.3	1145.7	1488	24	1161.9	1484	1142.9	1484	1167.3	1488	1145.7	1488	ML1R 2972 1488
1167.3	1145.7	1984	32	1161.9	1980	1142.9	1980	1167.3	1984	1145.7	1984	ML1R 2972 1984
1167.3	1145.7	2418	39	1161.9	2414	1142.9	2414	1167.3	2418	1145.7	2418	ML1R 2972 2418
1167.3	1145.7	2480	40	1161.9	2476	1142.9	2476	1167.3	2480	1145.7	2480	ML1R 2972 2480
1167.3	1145.7	2976	48	1161.9	2972	1142.9	2972	1167.3	2976	1145.7	2976	ML1R 2972 2976

Four-way post Technical info

Post Sizes

Post sizes available upto 5100 mm lengths

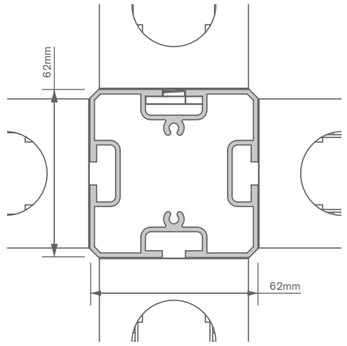

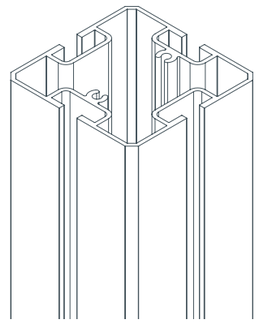

Fixing Method

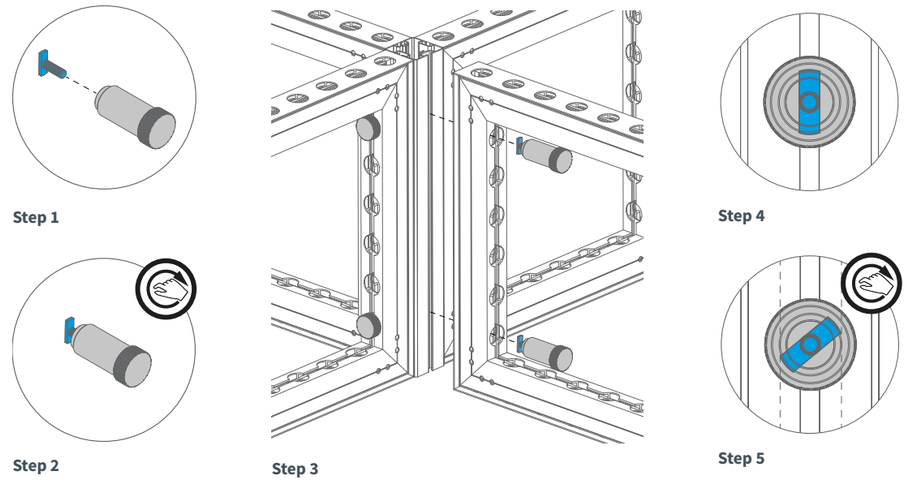

Four-way post Sizes & part codes

Post Width X	Post Depth Z	Post Height Y		Product Code
mm	mm	mm	Holes	
62	62	496	8	ML1P 0496
62	62	744	12	ML1P 0744
62	62	992	16	ML1P 0992
62	62	1240	20	ML1P 1240
62	62	1488	24	ML1P 1488
62	62	1984	32	ML1P 1984
62	62	2418	39	ML1P 2418
62	62	2480	40	ML1P 2480
62	62	2976	48	ML1P 2976

Two-way post Technical info

Post Sizes

Post sizes available upto 5100 mm lengths

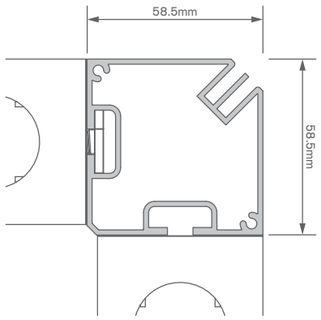

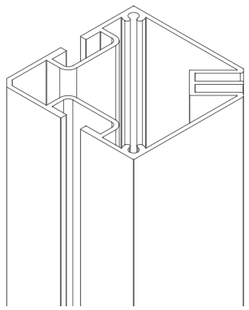

Fixing Method

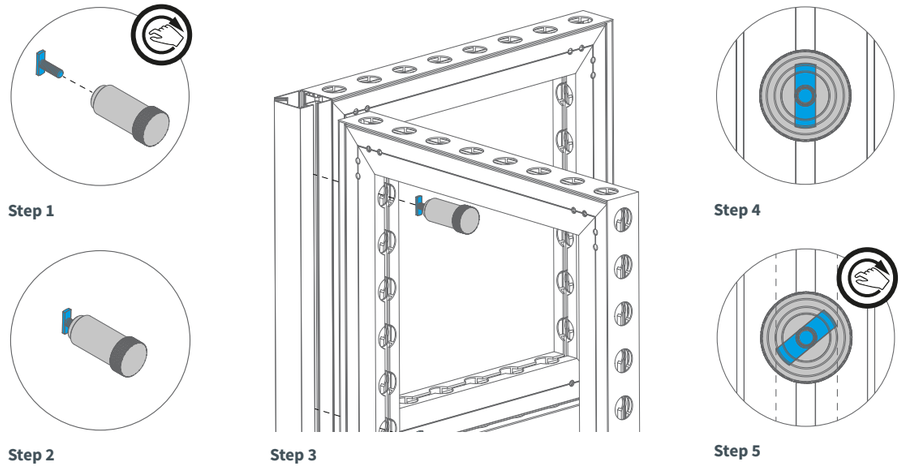

Two-way TFS post cap detail

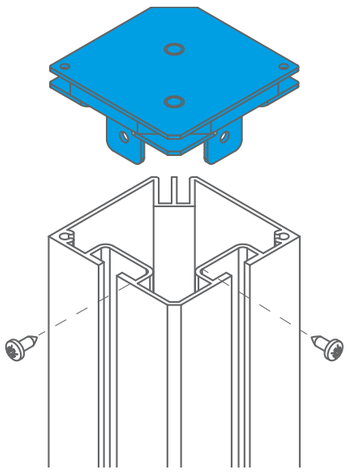

For continuous TFS graphics to span around the corners of Mod-U-Lok structures, each end of the corner posts requires a TFS post cap. This is secured to the channel of the post using a self-drilling screw. The result is a flush, neat capping of the post that is able to hold large printed graphics.

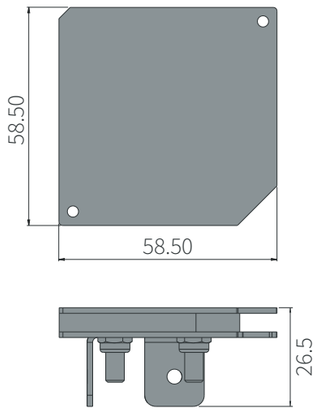

Please note: Each two-way TFS post comes with a two-way TFS post cap as standard.

Two-way post Sizes & part codes

Post Width X	Post Depth Z	Post Height Y		Product Code
mm	mm	mm	Holes	
58.5	58.5	496	8	ML1T 0496
58.5	58.5	744	12	ML1T 0744
58.5	58.5	992	16	ML1T 0992
58.5	58.5	1240	20	ML1T 1240
58.5	58.5	1488	24	ML1T 1488
58.5	58.5	1984	32	ML1T 1984
58.5	58.5	2418	39	ML1T 2418
58.5	58.5	2480	40	ML1T 2480
58.5	58.5	2976	48	ML1T 2976

Finishing panel A Technical info

Dimensions & Tolerances

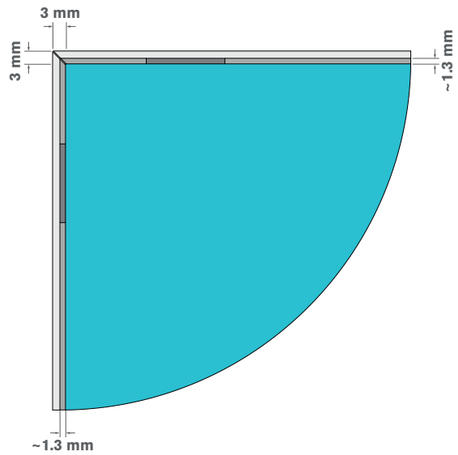

Top Elevation

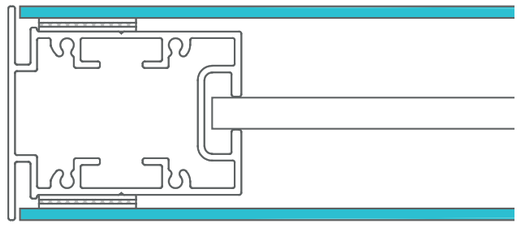

Mod-U-Lok structures can be embellished using finishing panels to meet your individual aesthetic requirements. Both straight and curved frames are engineered to accept panels formed from a variety of different materials including aluminium composite and foamed PVC that are up to 3mm thick so that they sit perfectly flush.

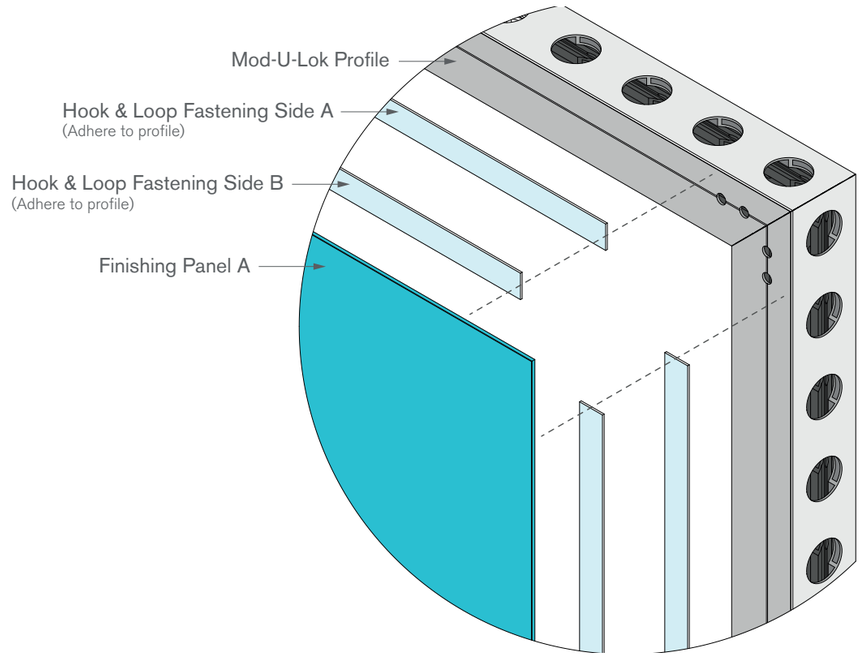

Calculation examples Finishing panel A

Straight Frame

Panel A Calculation:

Measure overall outer frame size

X - 4mm = **Panel A Dimension X**

Y - 4mm = **Panel A Dimension Y**

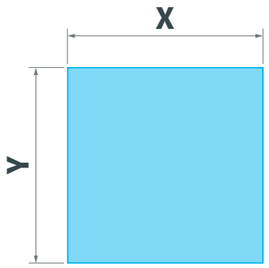

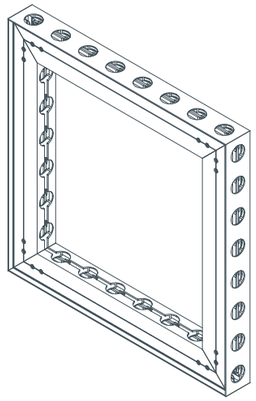

Seamless Corner

Panel A Calculation:

External Panel:

(**Z**+**X**) = **Xa**

Xa - 4mm = **Panel A Dimesion X**

Y - 4mm = **Panel A Dimension Y**

Internal Panel:

(**Z**+**X**) = **Xb**

Xb - 114mm = **Panel A Dimesion X**

Y - 4mm = **Panel A Dimension Y**

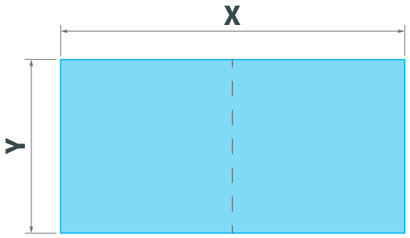

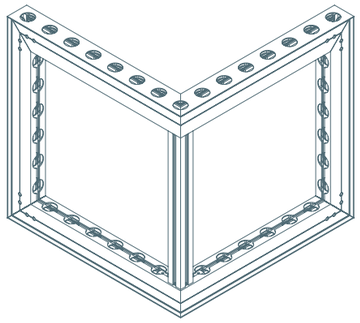

Seamless U

Panel A Calculation:

External Panel:

(**Z**+**X**+**Z**) = **Xa**

Xa - 4mm = **Panel A Dimesion X**

Y - 4mm = **Panel A Dimension Y**

Internal Panel:

(**Z**+**X**+**Z**) = **Xb**

Xb - 114mm = **Panel A Dimesion X**

Y - 4mm = **Panel A Dimension Y**

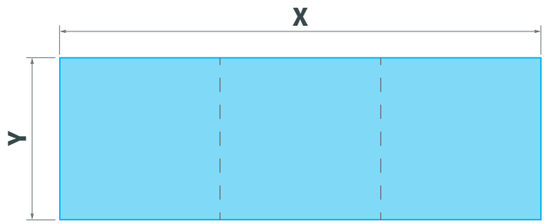

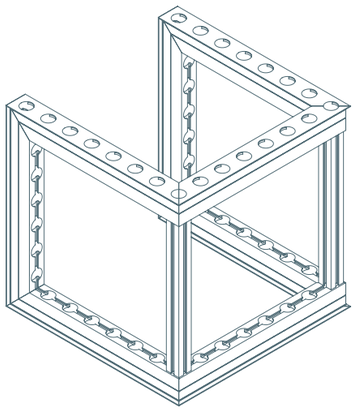

Finishing panel B Technical info

Dimensions & Tolerances

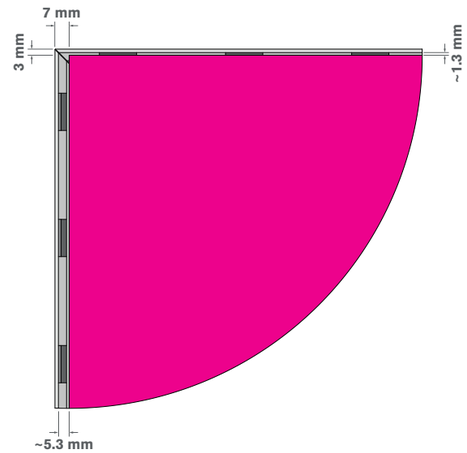

Top Elevation

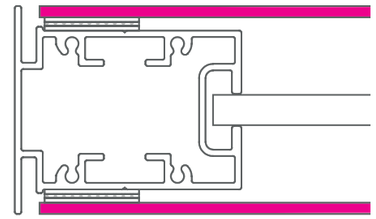

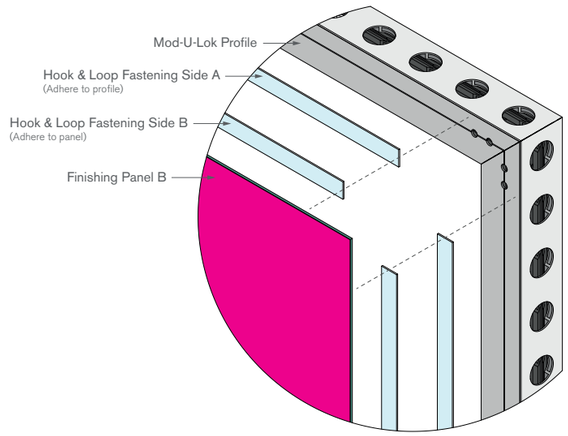

Finishing B-Panel offers all of the same creative freedom and flexibility as standard finishing panels, being compatible with the entire range of Mod-U-Lok frames and available in a variety of different materials. Unlike standard panels, though, finishing B-panels are designed to leave the CNC-machined slots at each end of the aluminium profile exposed.

Calculation examples Finishing panel B

Straight Frame

Panel B Calculation:

Measure overall outer frame size

X - 14mm = **Panel A Dimension X**

Y - 14mm = **Panel A Dimension Y**

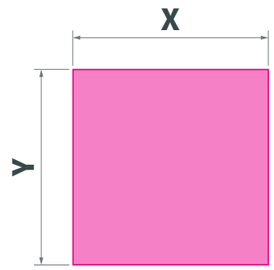

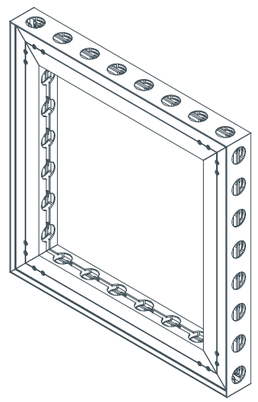

Tension fabric Technical info

Dimensions & Tolerances

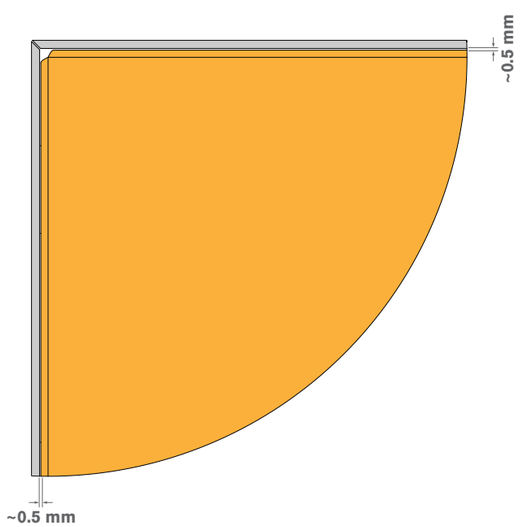

Top Elevation

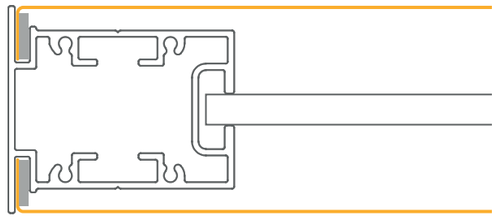

Mod-U-Lok frames are manufactured using aluminium profiles that are designed and engineered by Unibox in-house. The unique shape of the channels in the profiles means high-quality tension fabric graphics can be inserted into frames with speed and ease. Custom fabrics can be cut according to the size of your Mod-U-Lok structure to create seamless displays of any size.

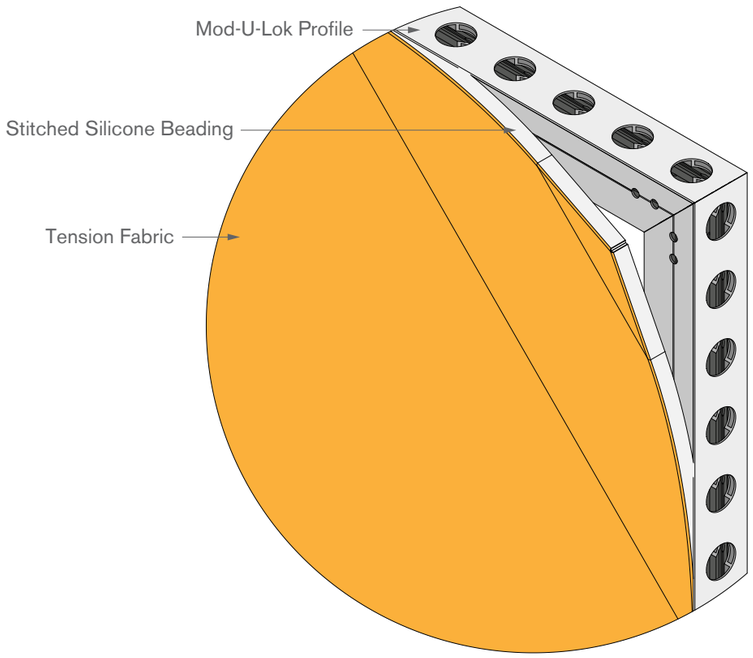

Calculation examples Tension fabric

Straight Frame

Tension Fabric Calculation:

Measure overall outer frame size

X = **Panel A Dimension X**

Y = **Panel A Dimension Y**

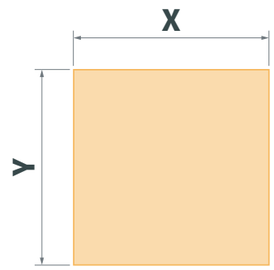

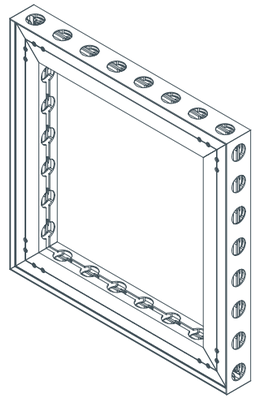

Seamless Corner

Tension Fabric Calculation:

Measure overall outer frame size

(**Z**+**X**) = **Xa**

Xa = **Panel A Dimesion X**

Y = **Panel A Dimension Y**

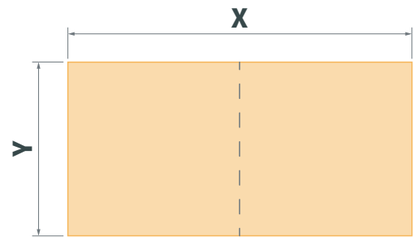

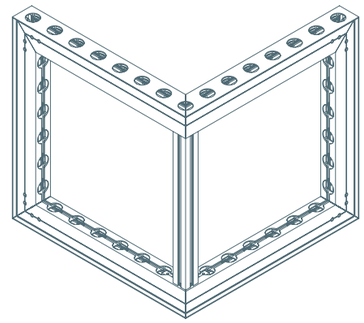

Seamless U

Tension Fabric Calculation:

Measure overall outer frame size

(**Z**+**X**+**Z**) = **Xb**

Xb = **Panel A Dimesion X**

Y = **Panel A Dimension Y**

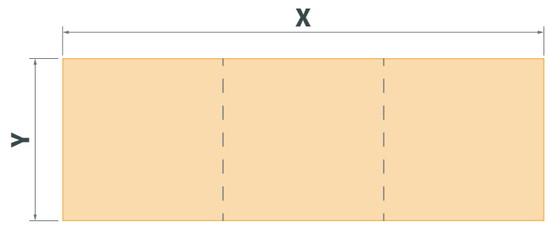

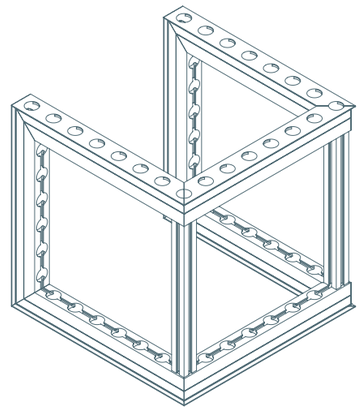

Multi-frame finishing panel

Technical info

Panel A - Multi-Frame Finishing

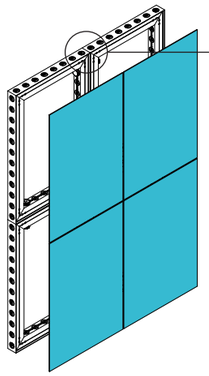

Top Elevation

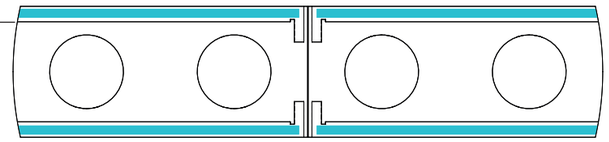

When fixing Finishing B-Panel, ensure the hook and loop fastening tape is adhered to the frame and the rear of the finishing panels. For best results, ensure the panels are evenly spaced within the frame.

Panel B - Multi-Frame Finishing

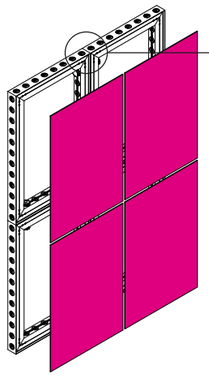

Top Elevation

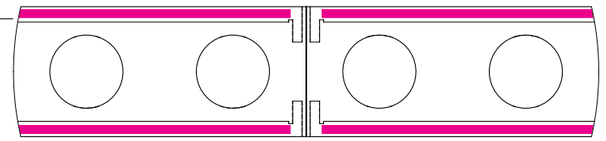

When fixing Finishing B-Panel, ensure the hook and loop fastening tape is adhered to the frame and the rear of the finishing panels. Additionally, ensure the panels are centrally aligned to ensure the slots within the profile are exposed and clear for any hook-in accessories to locate into.

Tension Fabric - Multi-Frame Finishing

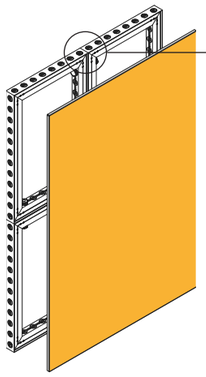

When spanning multiple panels, the silicone beading requires a relief cut to provide clearance from the frame edges. This can be cut by hand when fitting the tension fabric for the first time. Ensure to only cut the silicone and not the fabric.

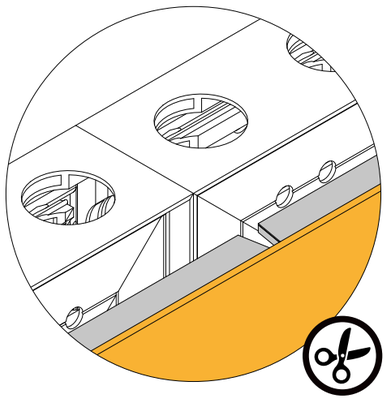

Two-way TFS post finishing

Technical info

Option 1 - Continuous TFS

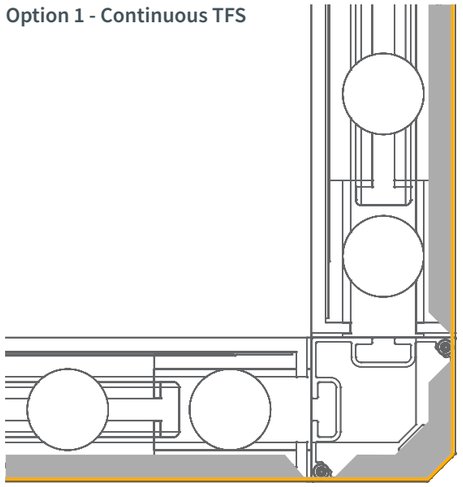

Our bespoke top cap provides a continuous channel around a corner to allow for seamless TFS graphics to secure into. Using the screw holes and the screw bosses in the post, the top cap is easily secured in position and the advantage of counter sunk holes means a flush finish against the frames meaning that if required, posts and caps can be stacked.

Option 2 - Corner Finishing TFS

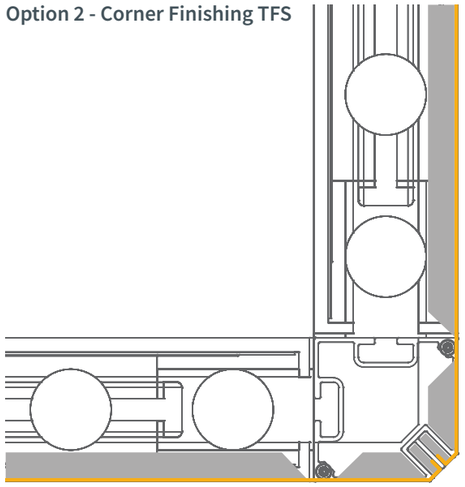

The top cap also provides guidance for the silicone beading used when securing two individual TFS graphics together when they meet at a corner. The top cap provides an additional surface onto which the silicone beading is secured and helps to prevent TFS graphics from coming loose.

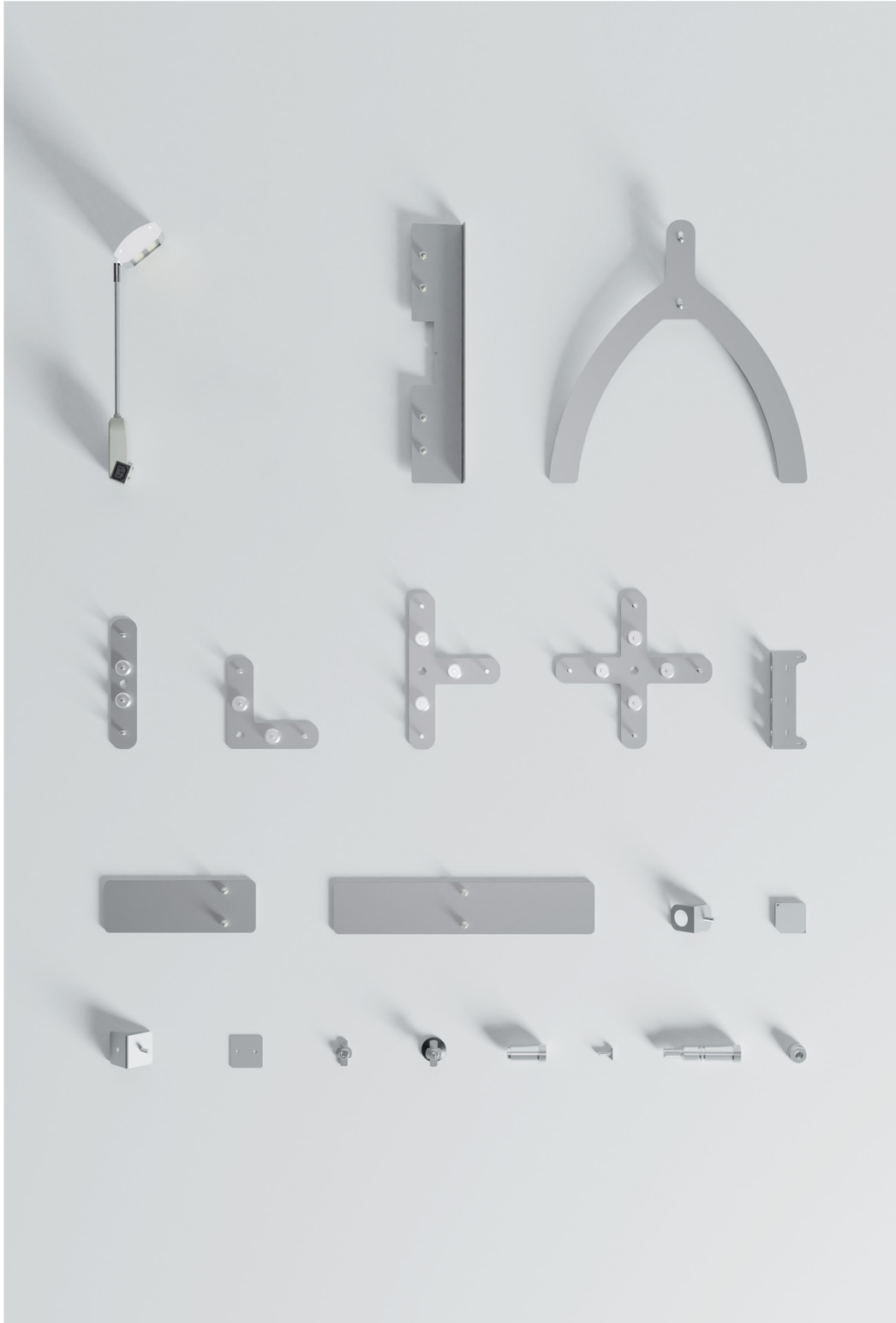

Pin connectors

Long Connector Pin - Part Code: ML1ALCP

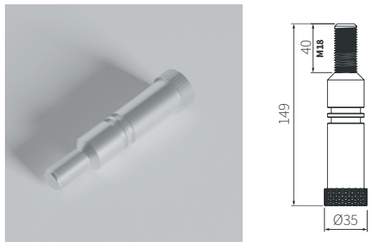

Long connector pin for frame-to-frame connections.

(To be used in conjunction with ML1AM18C).

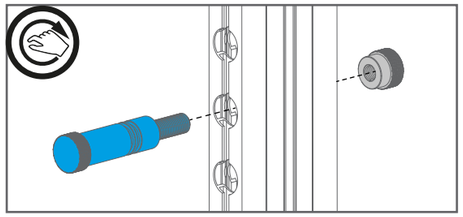

M18 Collar - Part Code: ML1AM18C

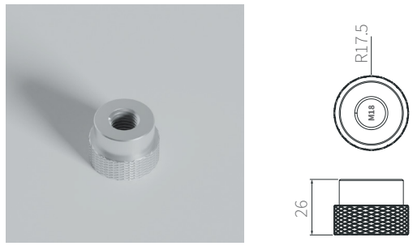

Connector collar for frame-to-frame connections.

(To be used in conjunction with ML1ALCP).

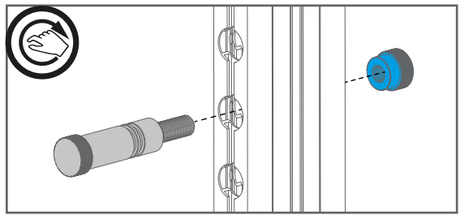

Short Connecting Pin - Part Code: ML1ASCP

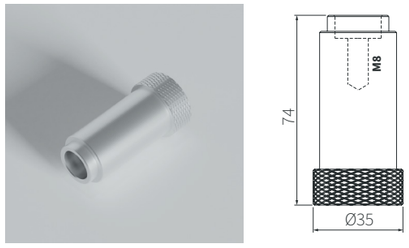

Short pin connector for various connector plates and T-Bolt.

(To be used in conjunction with ML1ATB, Foot Plates, Frame Connectors and Ceiling Brackets).

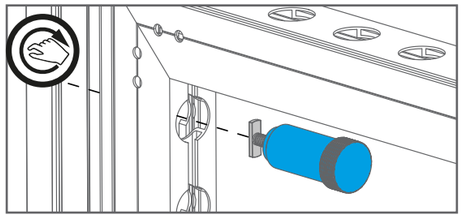

T-Bolt - Part Code: ML1ATB

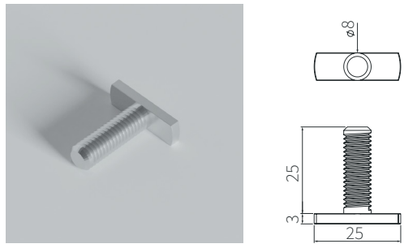

T-Bolt used for post profile frame connections.

(To be used in conjunction with ML1ASCP).

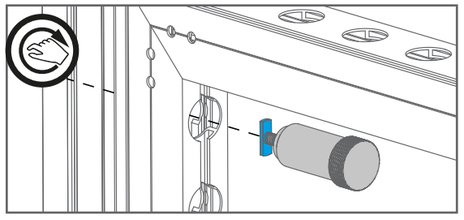

Foot plates

Double Side Foot Plate - Part Code: ML1ADSFP

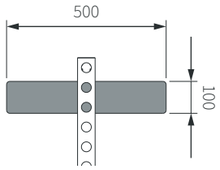

Double sided 6mm steel foot for stability.

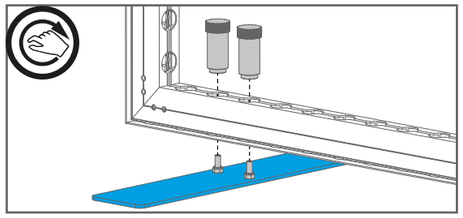

Single Side Foot Plate - Part Code: ML1ASSFP

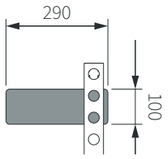

Single sided 6mm steel foot for stability.

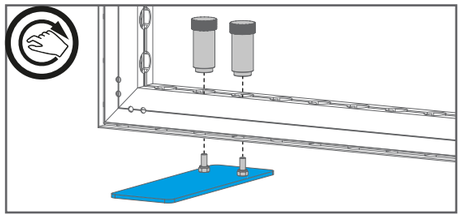

Side Mount Foot Plate - Part Code: ML1ASMFP

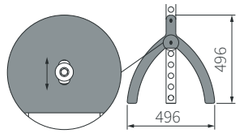

Side mount steel support foot. Slot fixing holes for vertical movement. This allows for connector plates and other foot options.

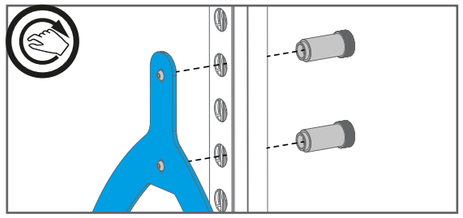

Adjustable Foot - Part Code: ML1AAF

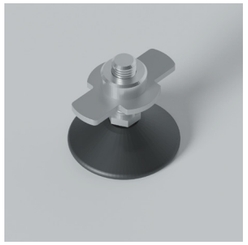
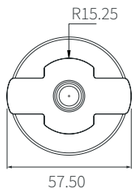

Foot with vertical adjustment for levelling frames on uneven surfaces.

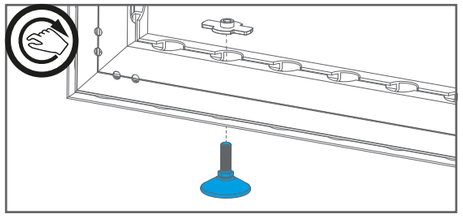

Frame connectors

One-Way Connector - Part Code: ML1A1WC

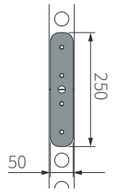

Frame-to-frame connector for straight in-line connections. Installed top and bottom of frame.

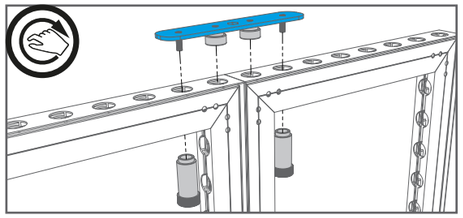

Two-Way Connector - Part Code: ML1A2WC

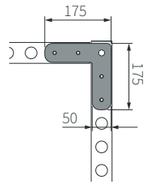

Frame-to-frame connector for 90° connections. Installed top and bottom of frame.

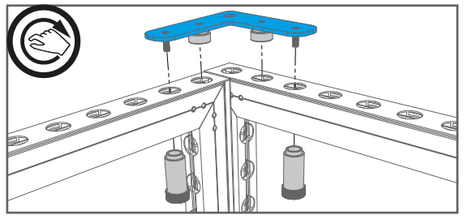

Three-Way Connector - Part Code: ML1A3WC

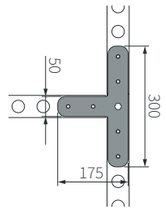

Frame-to-frame connector for 3 way connections. Installed top and bottom of frame.

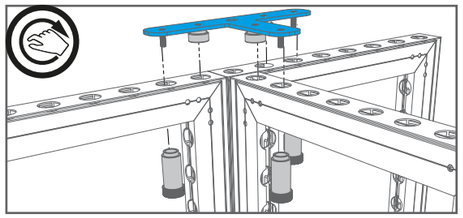

Four-Way Connector - Part Code: ML1A4WC

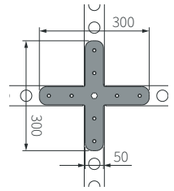

Frame-to-frame connector for 4 way connections. Installed top and bottom of frame.

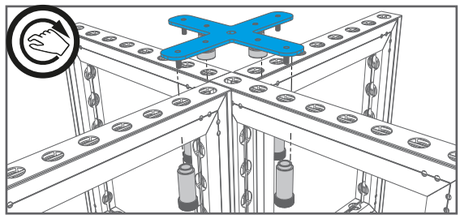

Frame connectors

Single T Connector - Part Code: ML1ASTC

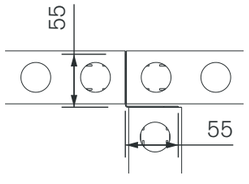

Frame-to-frame connector for 2 way connections. Installed between frames for 90° frame turn.

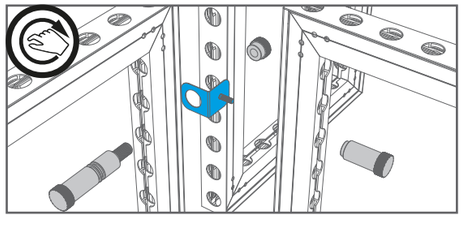

Fixing & support

Ceiling Panel Support - Part Code: ML1ACPS

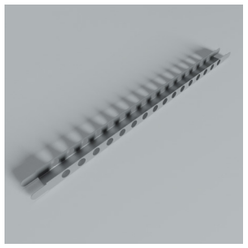

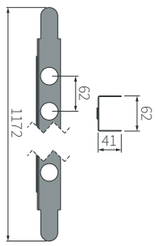

The ideal ceiling reinforcement. Hook tape is pre-mounted.

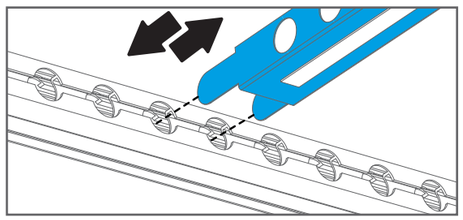

Note: This is a special order item. Please get in touch for availability and lead times.

Patress Mounting Bracket - Part Code: ML1APMB

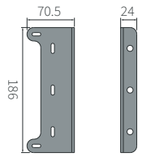

The versatile bracket to support patresses with pre-positioned fixing holes.

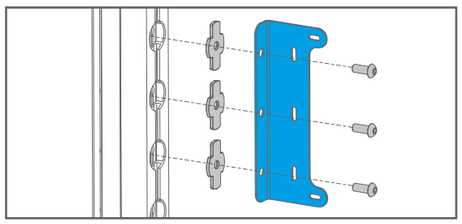

Shelf Brackets - Part Code: ML1ASB

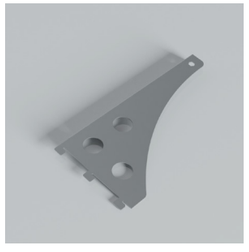

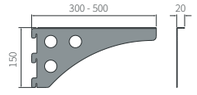

The hook-in bracket to create adjustable shelving. Available in 300, 400 & 500mm depths. Supplied in pairs.

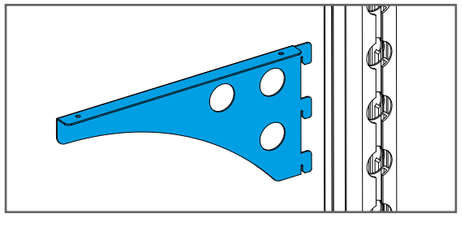

Ceiling Bracket - Part Code: ML1ACB

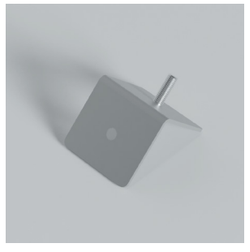

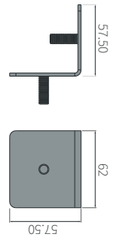

This bracket makes it easy to connect butt-jointed frames together at seamless 90° angles.

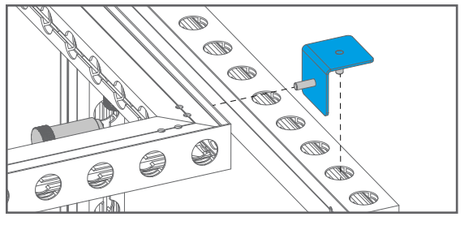

Note: This is a special order item. Please get in touch for availability and lead times.

Ceiling Support Bracket - Part Code: ML1ACSB

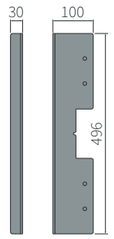

This provides essential structural reinforcement for Mod-U-Lok structures with ceilings by preventing aluminium profiles from sagging when suspended horizontally.

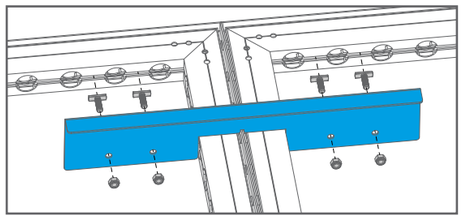

Adjustable Bracket - Part Code: ML1AAB

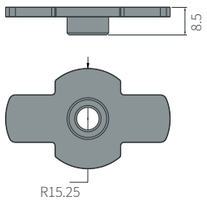

A small bracket that locates to provide a threaded fixing point for multi-use purposes.

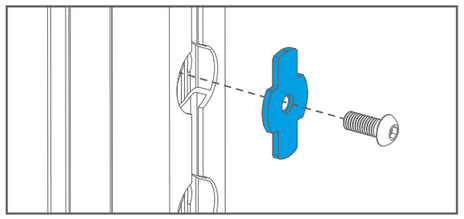

Note: This is a special order item. Please get in touch for availability and lead times.

Hook & Loop Fastening Tape - Part Code: ML1AHLFT

This self-adhesive fixing tape is an excellent alternative to screws, nails and glue. It uses hooked tape that locks into corresponding looped tape to create adjustable yet ultra-secure connections.

Four-Way Post Cap - Part Code: ML1A4WPC

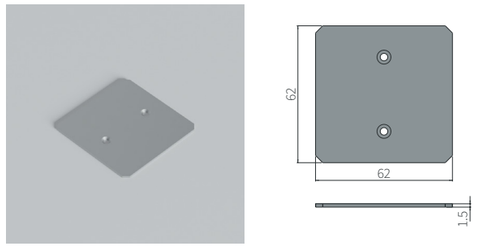

Post cap designed to cover the ends of four-way profiles.

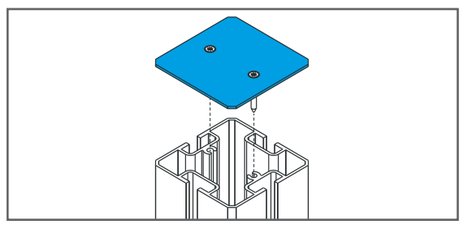

Spot Light - ML1ASLLC

Spotlight link cable enables upto 10 spotlights in a sequence to be linked together.

Lighting

Spotlight Kit - Part Code: ML1ASL

LED spotlight with a movable head that enables the direction and angle of illumination to be adjusted. Spotlights are fixed into Mod-U-Lok frames using locator pins. **Kit includes 2 lights & 2 power cables.*

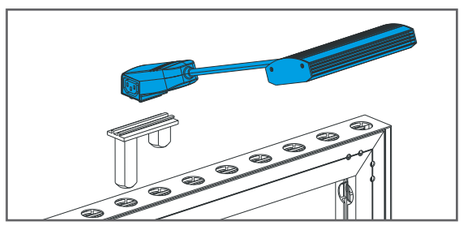

Spotlight Locator Pin - Part Code: ML1ASLLP

Locator pin works in conjunction with the LED spotlight and drops through the hole arrangement in a Mod-U-Lok frame to secure in position.

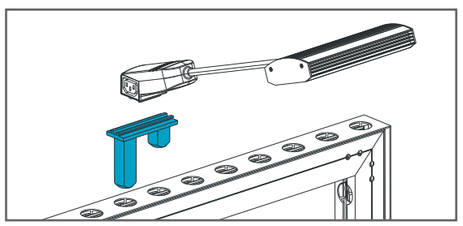

Get In Touch

+44(0)161 655 2100
info@unibox.co.uk
www.unibox.co.uk

HQ:
Greenside Way, Middleton, Manchester M24 1SW